Cambridge Assessment International Education

Cambridge IGCSE™

PHYSICS **0625/21**

Paper 2 Multiple Choice (Extended) **October/November 2020**

45 minutes

You must answer on the multiple choice answer sheet.

You will need: Multiple choice answer sheet
Soft clean eraser
Soft pencil (type B or HB is recommended)

INSTRUCTIONS

- There are **forty** questions on this paper. Answer **all** questions.
- For each question there are four possible answers **A**, **B**, **C** and **D**. Choose the **one** you consider correct and record your choice in soft pencil on the multiple choice answer sheet.
- Follow the instructions on the multiple choice answer sheet.
- Write in soft pencil.
- Write your name, centre number and candidate number on the multiple choice answer sheet in the spaces provided unless this has been done for you.
- Do **not** use correction fluid.
- Do **not** write on any bar codes.
- You may use a calculator.
- Take the weight of 1.0 kg to be 10 N (acceleration of free fall = 10 m / s^2).

INFORMATION

- The total mark for this paper is 40.
- Each correct answer will score one mark. A mark will not be deducted for a wrong answer.
- Any rough working should be done on this question paper.

This document has **16** pages. Blank pages are indicated.

IB20 11_0625_21/3RP
© UCLES 2020

[Turn over

www.root19.com +91 - 9969 353 391

1 For which one of the following measurements would a micrometer screw gauge be most suitable?

A length of this page

B length of a pencil

C diameter of a wire

D diameter of an atom

2 The speed–time graph represents a journey.

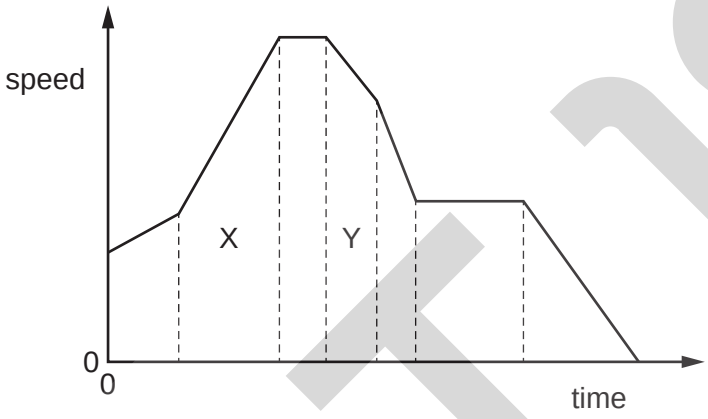

How does the graph show that the distance travelled in section X of the journey is greater than the distance travelled in section Y?

A The area below section X of the graph is greater than the area below section Y.

B The gradient of section X of the graph is greater than the gradient of section Y.

C The speed at the end of section X of the journey is greater than the speed at the end of section Y.

D The time for section X of the journey is greater than the time for section Y.

3 A car is travelling at a velocity of 2.0 m / s. It accelerates at a constant 0.20 m / s^2 for 2.5 minutes.

What is the final velocity of the car?

A 2.5 m / s **B** 5.2 m / s **C** 30 m / s **D** 32 m / s

4 Which quantity is weight an example of?

A acceleration

B force

C mass

D pressure

www.root19.com +91 - 9969 353 391

5 A sphere P, made of steel, has a weight of 10 N on Earth.

Another sphere Q, also made of steel, has a weight of 10 N on Mars.

The gravitational field strength on Earth is greater than the gravitational field strength on Mars.

Which statement is correct?

A The mass of sphere P is the same as the mass of sphere Q.

B The mass of sphere P is less than the mass of sphere Q.

C On Mars, the weight of sphere P is more than 10 N.

D On Earth, the weight of sphere Q is less than 10 N.

6 A metal ball is attached to a cork and is lowered into a measuring cylinder, pulling the cork into the water, as shown.

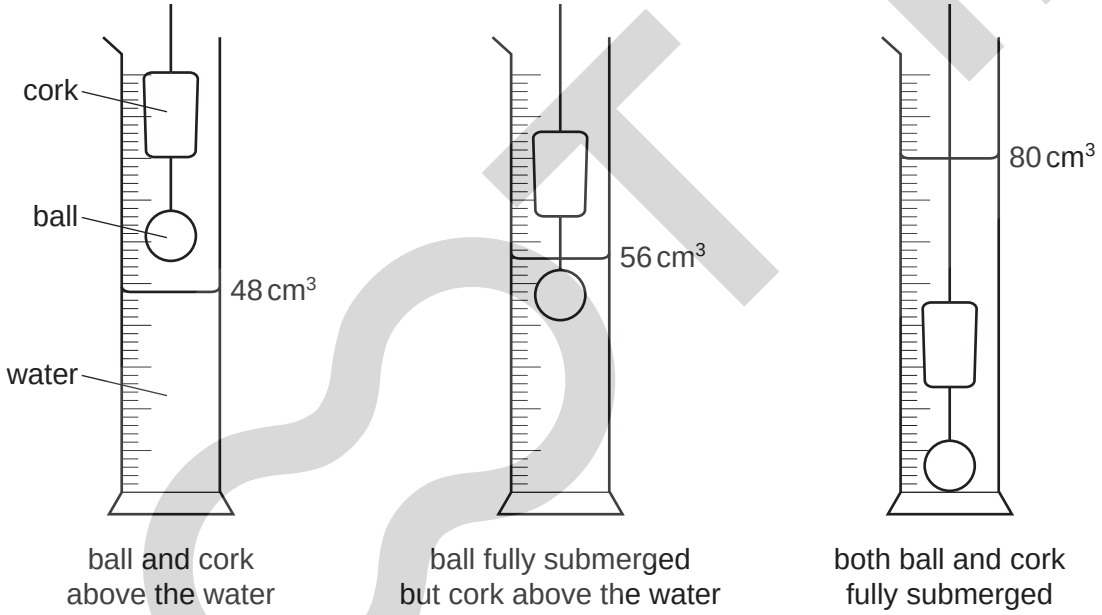

The mass of the cork is 4.8 g.

What is the density of the cork?

A 0.15 g / cm^3 **B** 0.20 g / cm^3 **C** 0.60 g / cm^3 **D** 5.0 g / cm^3

© UCLES 2020
www.root19.com

+91 - 9969 353 991

7 A uniform plank rests on a pivot at its centre.

Two children P and Q sit on the plank in the positions shown.

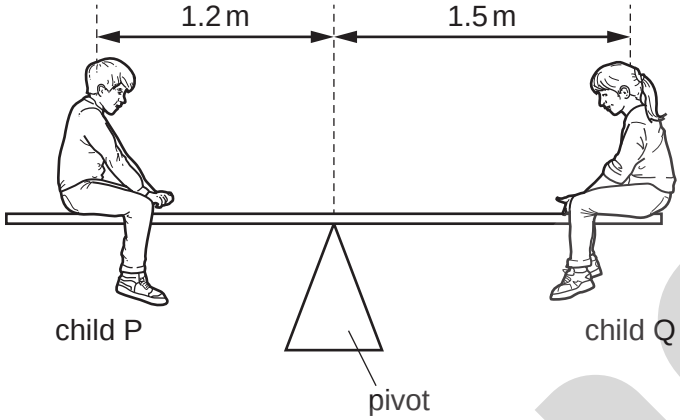

The mass of child P is 25 kg.

The plank is balanced.

What is the mass of child Q?

A 20 kg **B** 25 kg **C** 31 kg **D** 45 kg

8 The diagram shows three forces acting on an object.

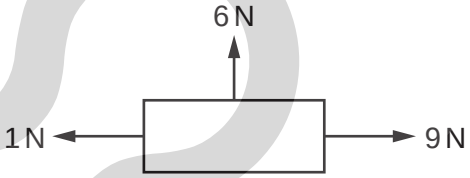

What is the value of the resultant force acting on the object?

A 2 N **B** 10 N **C** 14 N **D** 16 N

© UCLES 2020
www.root19.com

+91 - 9969 353 391

9 An object with a mass of 0.20 kg moves at 0.20 m / s, as shown.

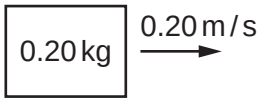

Which other object has a momentum that is identical to the momentum of this object?

A

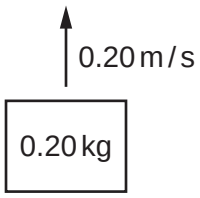

B

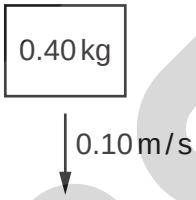

C

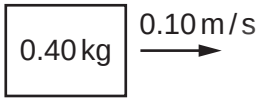

D

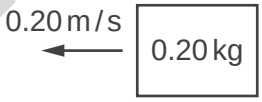

10 A stone is dropped from rest at a height of 2.0 m above the surface of a planet.

The planet has no atmosphere.

The speed of the stone just before reaching the surface of the planet is 3.8 m / s.

What is the acceleration of free fall on the planet?

A zero **B** 1.9 m / s^2 **C** 3.6 m / s^2 **D** 7.2 m / s^2

11 An electric motor uses 1000 J of electrical energy. It provides 450 J of useful output energy.

What is the efficiency of the motor?

A 4.5% **B** 5.5% **C** 45% **D** 55%

12 To calculate the power produced by a force, the size of the force must be known.

What else needs to be known to calculate the power?

	the distance that the force moves the object	the time for which the force acts on the object
A	✓	✓
B	✓	✗
C	✗	✓
D	✗	✗

key
✓ = needed
✗ = not needed

© UCLES 2020
www.root19.com

+91 - 9969 353 991

13 A barometer reads 780 mm Hg. Mercury has a density of 1.36×10^4 kg / m^3.

What is the pressure of the atmosphere in N / m^2?

A 1.1×10^4 N / m^2

B 1.1×10^5 N / m^2

C 1.1×10^7 N / m^2

D 1.1×10^8 N / m^2

14 The diagram shows a mercury barometer.

Which height is used as a measurement of atmospheric pressure?

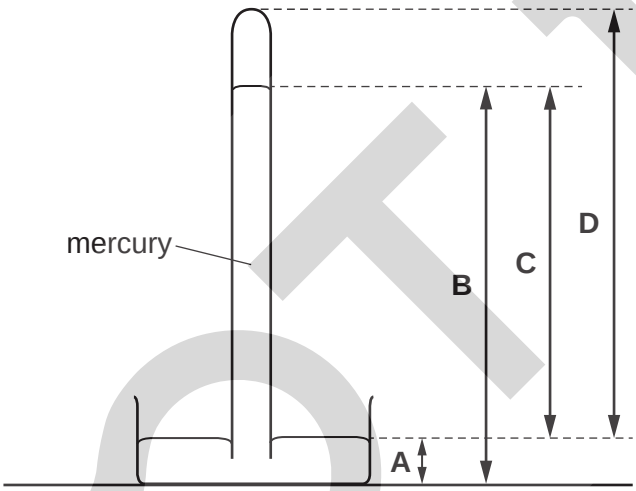

15 A student splashes water on to her face. Here are three statements about the effects.

P The water uses energy to evaporate.

Q The water gains energy from the student.

R The face of the student cools.

Which statements are correct?

A P and Q only **B** P and R only **C** Q and R only **D** P, Q and R

16 When a bridge is built, a gap is left between each concrete slab.

Why are these gaps left?

A Concrete expands on warm days.

B Concrete contracts on warm days.

C The gaps expand on warm days.

D The gaps contract on cold days.

www.root19.com +91 - 9969 353 391

17 The specific heat capacity of solid P is greater than that of solid Q.

What does this statement mean?

A Less energy is needed to raise the temperature by 1 °C of unit mass of solid P than unit mass of solid Q.

B Less energy is needed to melt unit mass of solid P than unit mass of solid Q.

C More energy is needed to raise the temperature by 1 °C of unit mass of solid P than unit mass of solid Q.

D More energy is needed to melt unit mass of solid P than unit mass of solid Q.

18 A student placed a number of ice cubes in a container with a hole in the base. He left them to melt so that the water dripped into a beaker placed on a balance. The student recorded the initial mass of the beaker and the final mass of the beaker and water after five minutes.

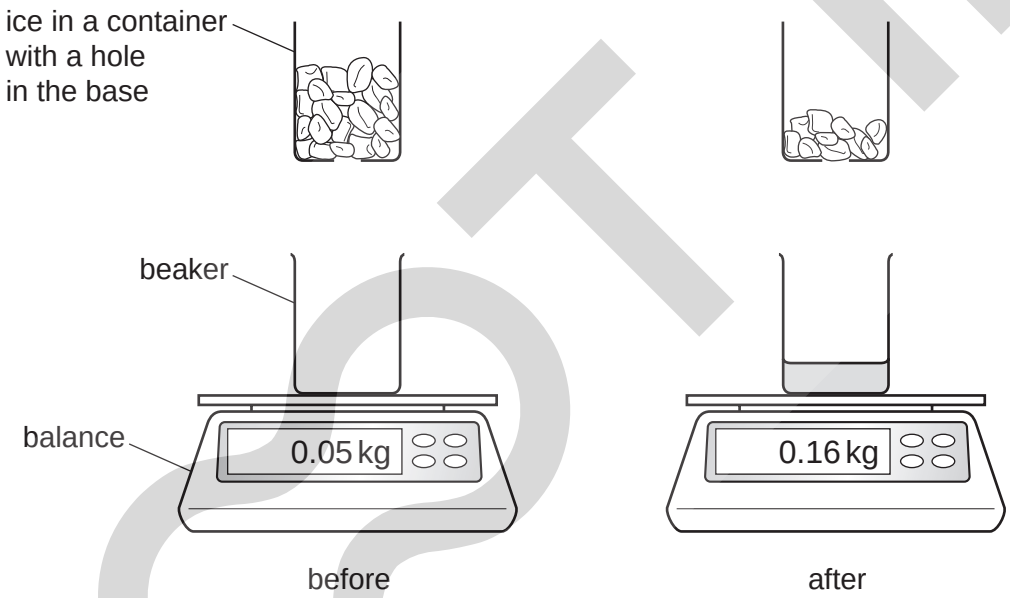

The specific latent heat of fusion for water is 334 J / g.

How much energy was absorbed from the surroundings in order to melt the ice?

A 37 J **B** 54 J **C** 37 000 J **D** 54 000 J

www.root19.com +91 - 9969 353 991

19 The diagram shows four rods. Each rod is made of a different metal.

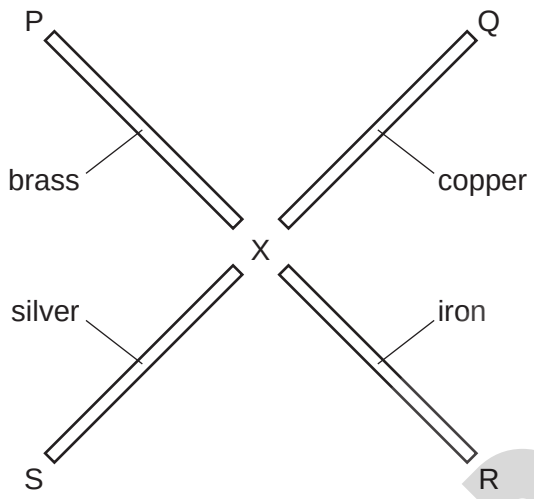

Wax is used to attach small metal balls at the rod ends P, Q, R and S.

Each rod is the same size. They are heated uniformly by a Bunsen burner at point X.

As the rods warm up, the wax melts and the balls fall off.

Why does the ball on the silver rod fall first?

A Silver is the best conductor of heat.

B Silver is the worst conductor of heat.

C Silver is the best radiator of heat.

D Silver is the worst radiator of heat.

20 Four cups **A**, **B**, **C** and **D** contain hot coffee.

Which cup keeps the coffee warm the longest?

	the outside surface of the cup	the top of the cup
A	black	covered with a lid
B	black	no lid
C	white	covered with a lid
D	white	no lid

www.root19.com +91 - 9969 353 391

21 Which row correctly describes light waves?

	wave type	direction of vibrations
A	longitudinal	parallel to direction of wave travel
B	longitudinal	perpendicular to direction of wave travel
C	transverse	parallel to direction of wave travel
D	transverse	perpendicular to direction of wave travel

22 The diagram shows part of a diffracted wave pattern.

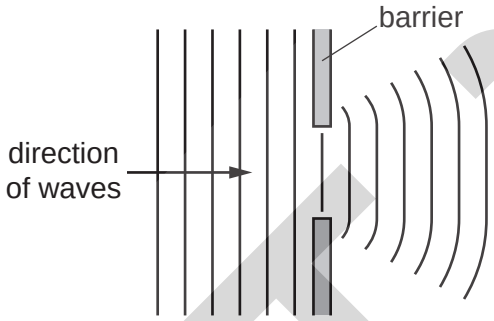

Changes are made to the wavelength and to the gap size to produce a semicircular diffracted wave pattern.

Which row produces the required semicircular diffracted wave pattern?

	gap in barrier	wavelength
A	larger	same
B	larger	smaller
C	same	larger
D	same	smaller

23 Which statement about a thin converging lens is correct?

A All rays of light refracted by the lens pass through the principal focus.

B All rays initially parallel to the principal axis of the lens are refracted through the principal focus.

C The focal length of the lens is the distance between the image and the principal focus.

D The focal length of the lens is the distance between the object and the image.

© UCLES 2020
www.root19.com

+91 - 9969 353 991

24 The diagram shows white light passing through a prism.

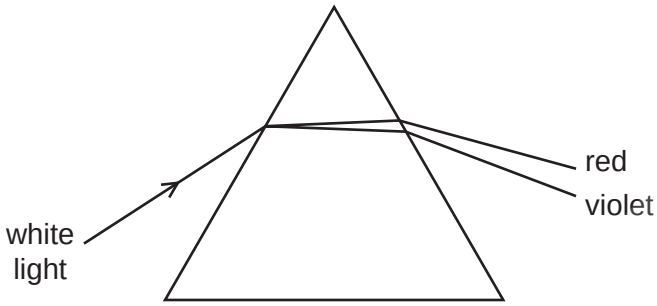

Which description of what happens as the light passes into the prism is correct?

A The speed of the red light is less than the speed of the violet light and the red light is the least refracted.

B The speed of the red light is greater than the speed of the violet light and the red light is the least refracted.

C The speed of the violet light is less than the speed of the red light and the violet light is the least refracted.

D The speed of the violet light is greater than the speed of the red light and the violet light is the least refracted.

25 Which row gives possible values for the speed of sound?

	speed in gas m/s	speed in liquid m/s	speed in solid m/s
A	972	1450	3560
B	972	3560	1450
C	1450	3560	972
D	3560	972	1450

26 A police car with its siren sounding is stationary in heavy traffic. A pedestrian notices that, although the loudness of the sound produced does not change, the pitch varies.

Which row describes the amplitude and the frequency of the sound?

	amplitude	frequency
A	constant	constant
B	constant	varying
C	varying	constant
D	varying	varying

© UCLES 2020
www.root19.com

+91 - 9969 353 391

27 A piece of steel is slightly magnetised. It is hit several times with a hammer.

What effect will this have on the steel?

	the steel is parallel to a strong magnetic field	the steel is at right-angles to a weak magnetic field
A	it becomes magnetised more strongly	it becomes magnetised more strongly
B	it becomes magnetised more strongly	it loses its magnetism
C	it loses its magnetism	it becomes magnetised more strongly
D	it loses its magnetism	it loses its magnetism

28 Two soft-iron pins are suspended from the S pole of a bar magnet.

Which diagram shows how the pins are deflected?

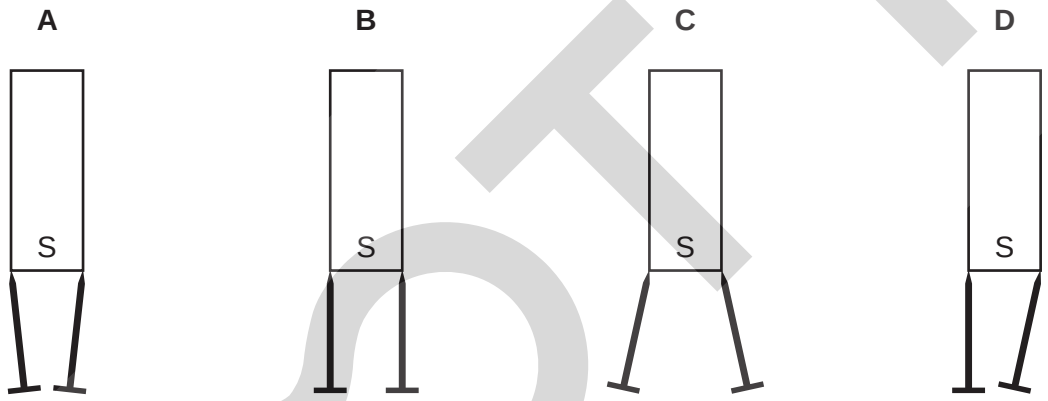

29 A negatively charged plastic rod is brought near to an uncharged metal sphere and held there.

What happens when the metal sphere is earthed?

A Electrons flow from the metal sphere to earth.

B Electrons flow from earth to the metal sphere.

C Positive charge flows from the metal sphere to earth.

D Positive charge flows from earth to the metal sphere.

30 Which statement defines the electromotive force (e.m.f.) of a cell?

A the current in the cell when 1.0 C of charge flows in 1.0 s

B the current supplied by the cell to drive 1.0 C of charge around a complete circuit

C the energy supplied by the cell to drive 1.0 C of charge around a complete circuit

D the energy supplied by the cell to drive 1.0 A of current around a complete circuit

© UCLES 2020
www.root19.com

+91 - 9969 353 991

31 Four wires are made of the same metal.

Which wire has the greatest resistance?

A a 100 cm long wire with a diameter of 3.0 mm

B a 100 cm long wire with a diameter of 6.0 mm

C a 10 cm long wire with a diameter of 3.0 mm

D a 10 cm long wire with a diameter of 6.0 mm

32 In which circuit is there just a single lamp lit?

A

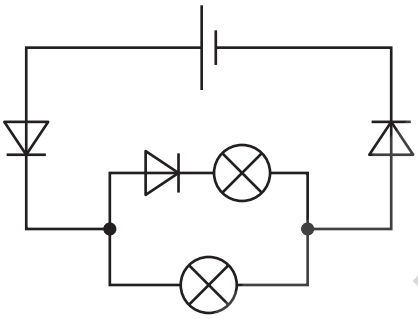

B

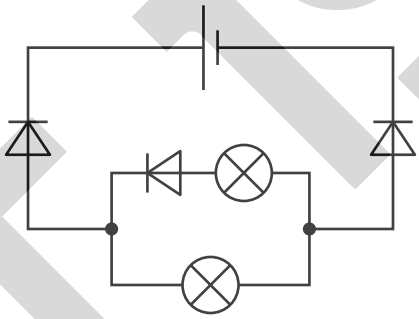

C

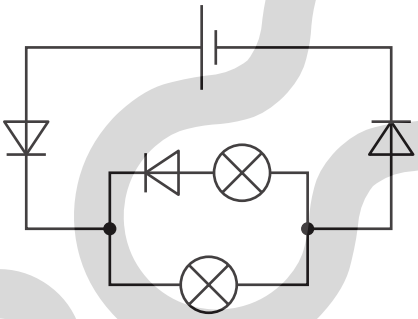

D

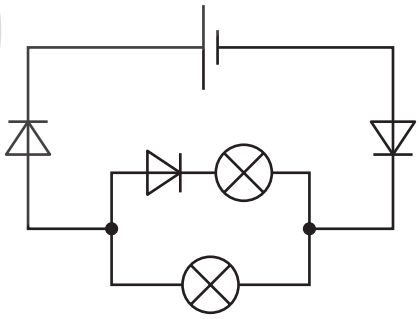

© UCLES 2020
www.root19.com

+91 - 9969 353 391

33 A student uses four ammeters P, Q, R and S to measure the current in different parts of the circuit shown.

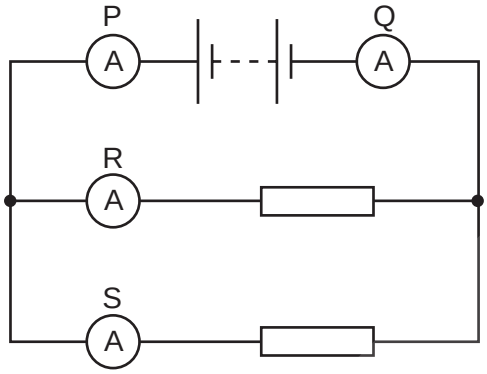

Which two ammeters read the largest current?

A P and Q **B** P and R **C** R and Q **D** R and S

34 Which combination of logic gates gives the truth table shown?

inputs		output
X	Y	Z
0	0	1
0	1	1
1	0	1
1	1	0

A

B

C

D

© UCLES 2020
www.root19.com

+91 - 9969 353 991

35 A transformer is needed to convert a supply of 240 V a.c. into 4800 V a.c..

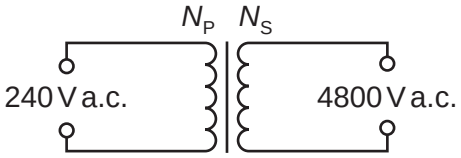

Which pair of coils would be suitable for this transformer?

	number of turns on primary coil N_P	number of turns on secondary coil N_S
A	50	1 000
B	240	48 000
C	480	24
D	2000	100

36 The diagram shows part of a long current-carrying conductor.

At which point is the magnetic field strongest?

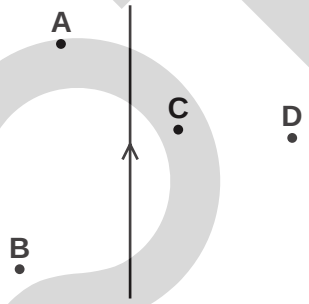

37 A beam of particles moves through a magnetic field.

In which situation do the particles experience a magnetic force?

A a beam of α-particles moving parallel to the magnetic field lines

B a beam of electrons moving parallel to the magnetic field lines

C a beam of β-particles moving perpendicularly across the magnetic field lines

D a beam of neutrons moving perpendicularly across the magnetic field lines

38 Which statement is correct for the nucleus of **any** atom?

A The nucleus contains electrons, neutrons and protons.

B The nucleus contains the same number of protons as neutrons.

C The nucleus has a total charge of zero.

D The nucleus is very small compared with the size of the atom.

www.root19.com +91 - 9969 353 391

39 Two beams of radiation, P and Q, enter an electric field as shown.

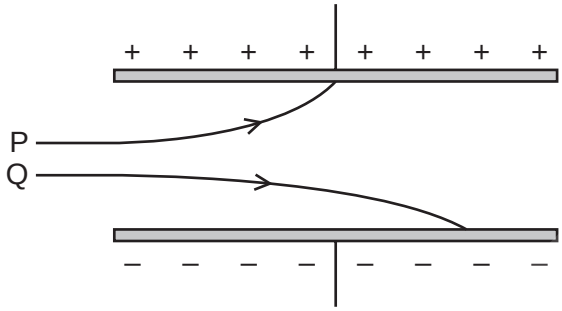

Which type of radiations are P and Q?

	P	Q
A	beta (β)	alpha (α)
B	beta (β)	gamma (γ)
C	gamma (γ)	alpha (α)
D	gamma (γ)	gamma (γ)

40 Which equation represents the β-decay of lead-209?

A $^{209}_{82}Pb + ^{0}_{-1}e \rightarrow ^{209}_{83}Bi$

B $^{209}_{82}Pb + ^{0}_{-1}e \rightarrow ^{209}_{81}Tl$

C $^{209}_{82}Pb \rightarrow ^{209}_{83}Bi + ^{0}_{-1}e$

D $^{209}_{82}Pb \rightarrow ^{209}_{81}Tl + ^{0}_{-1}e$

© UCLES 2020
www.root19.com

+91 - 9969 353 391

BLANK PAGE

Permission to reproduce items where third-party owned material protected by copyright is included has been sought and cleared where possible. Every reasonable effort has been made by the publisher (UCLES) to trace copyright holders, but if any items requiring clearance have unwittingly been included, the publisher will be pleased to make amends at the earliest possible opportunity.

To avoid the issue of disclosure of answer-related information to candidates, all copyright acknowledgements are reproduced online in the Cambridge Assessment International Education Copyright Acknowledgements Booklet. This is produced for each series of examinations and is freely available to download at www.cambridgeinternational.org after the live examination series.

Cambridge Assessment International Education is part of the Cambridge Assessment Group. Cambridge Assessment is the brand name of the University of Cambridge Local Examinations Syndicate (UCLES), which itself is a department of the University of Cambridge.

www.root19.com +91 - 9969 353 391